CLUTCH

	Page
ADJUSTMENT	2-2
AIR BLEEDING	2-3
CLUTCH PEDAL	2-4
CLUTCH MASTER CYLINDER	2-6
CLUTCH RELEASE CYLINDER	2-12
CLUTCH UNIT & RELEASE BEARING	2-16

Fig. 2-1

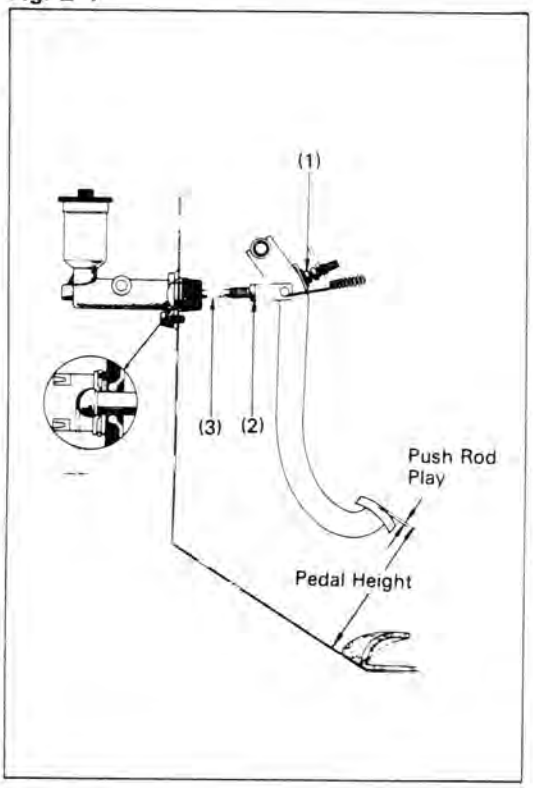

ADJUSTMENT

CLUTCH PEDAL

1. Loosen the lock nut (2) and the push rod (3).
2. Adjust the pedal height by turning the stop bolt (1).

   Pedal height from toe-boad:
   (w/brake booster)

FJ, BJ, HJ4 _ series	**215 mm (8.46 in.)**
FJ, BJ, HJ6 _ series	**195 mm (7.68 in.)**

   (w/o brake booster)

FJ4 _ series	**215 mm (8.46 in.)**

3. Loosen the lock nut (2), and adjust the push rod play by turning the push rod (3).

   Push rod play at pedal top:
   1.0 – 5.0 mm
   (0.039 – 0.197 in.)

Fig. 2-2

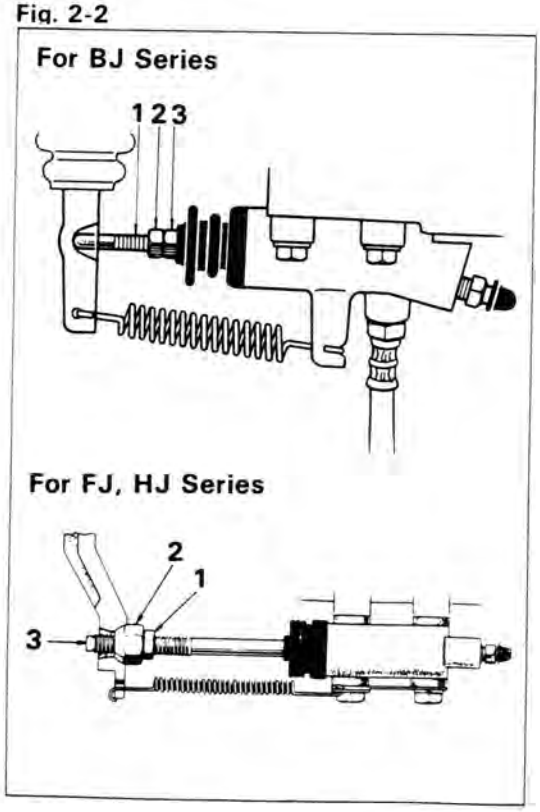

RELEASE CYLINDER

1. Adjust the play at release fork tip by loosening the lock nut (2), and turning the push rod No.1 (3) with a spanner while holding the push rod No.2 (1) with a suitable tool.

   Release fork end play

FJ series	**4.0 – 5.0 mm (0.157 – 0.197 in.)**
BJ series	**3.0 – 4.0 mm (0.118 – 0.157 in.)**
HJ series	**4.0 – 5.0 mm (0.157 – 0.197 in.)**

2. Check the pedal freeplay at the pedal top.

   Pedal freeplay: 30 – 50 mm (1.18 – 1.97 in.)

Fig. 2-3

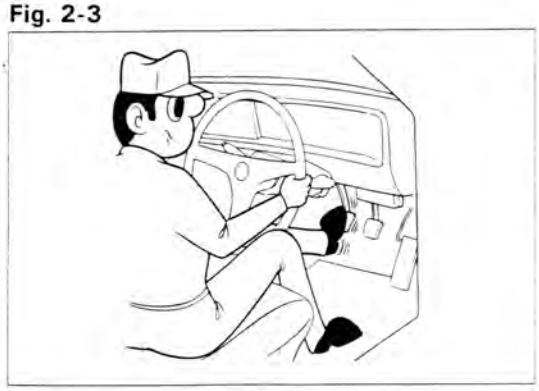

AIR BLEEDING

If any work is performed on the clutch system or air enters in the clutch line, bleed the air.

– Note –

Be careful not to allow any fluid to get on painted surfaces.

Fig. 2-4

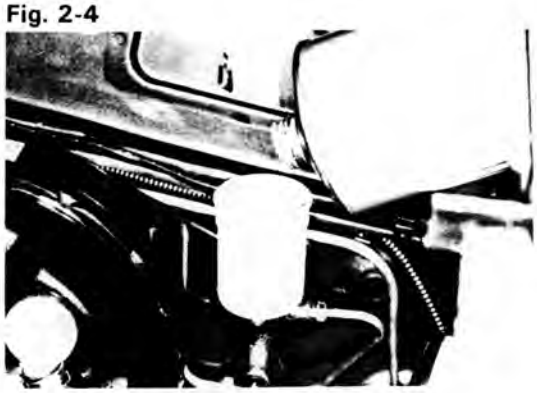

1. Fill the master cylinder reservoir with clean brake fluid.

– Note –

When bleeding, do not allow the fluid in the master cylinder reservoir to become depleted.

Fig. 2-5

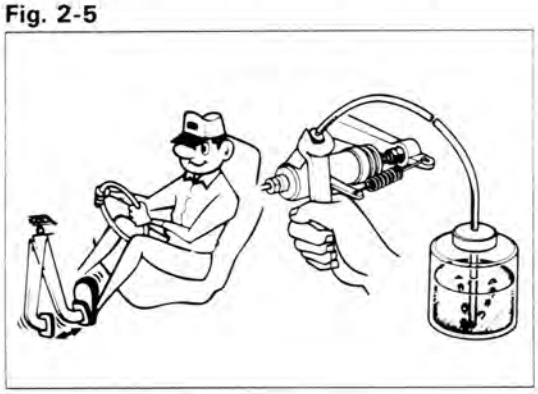

2. Attach a vinyl tube to the release cylinder bleeder plug, and insert the other end into a container.
3. Depress the clutch pedal several times, and then while holding it depressed, loosen the bleeder plug about one-third to one-half turn. When the fluid pressure in the cylinder is almost depleted retighten the plug. Repeat this operation until there are no more air bubbles in the system.

Fig. 2-6

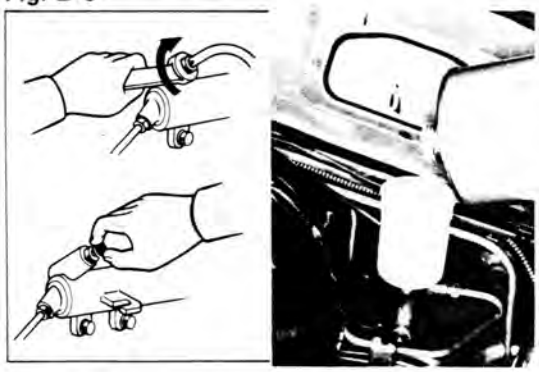

4. When there are no more bubbles, hold the clutch pedal depressed and tighten the bleeder plug.
   Then install the bleeder plug cap.
5. After completing the bleeding operation, apply fluid pressure onto the pipe line and check for leakage.
6. Replenish the fluid in the reservoir to the specified level.

CLUTCH PEDAL

REMOVAL

Remove the parts in the numerical order shown in the figure.

Fig. 2-7

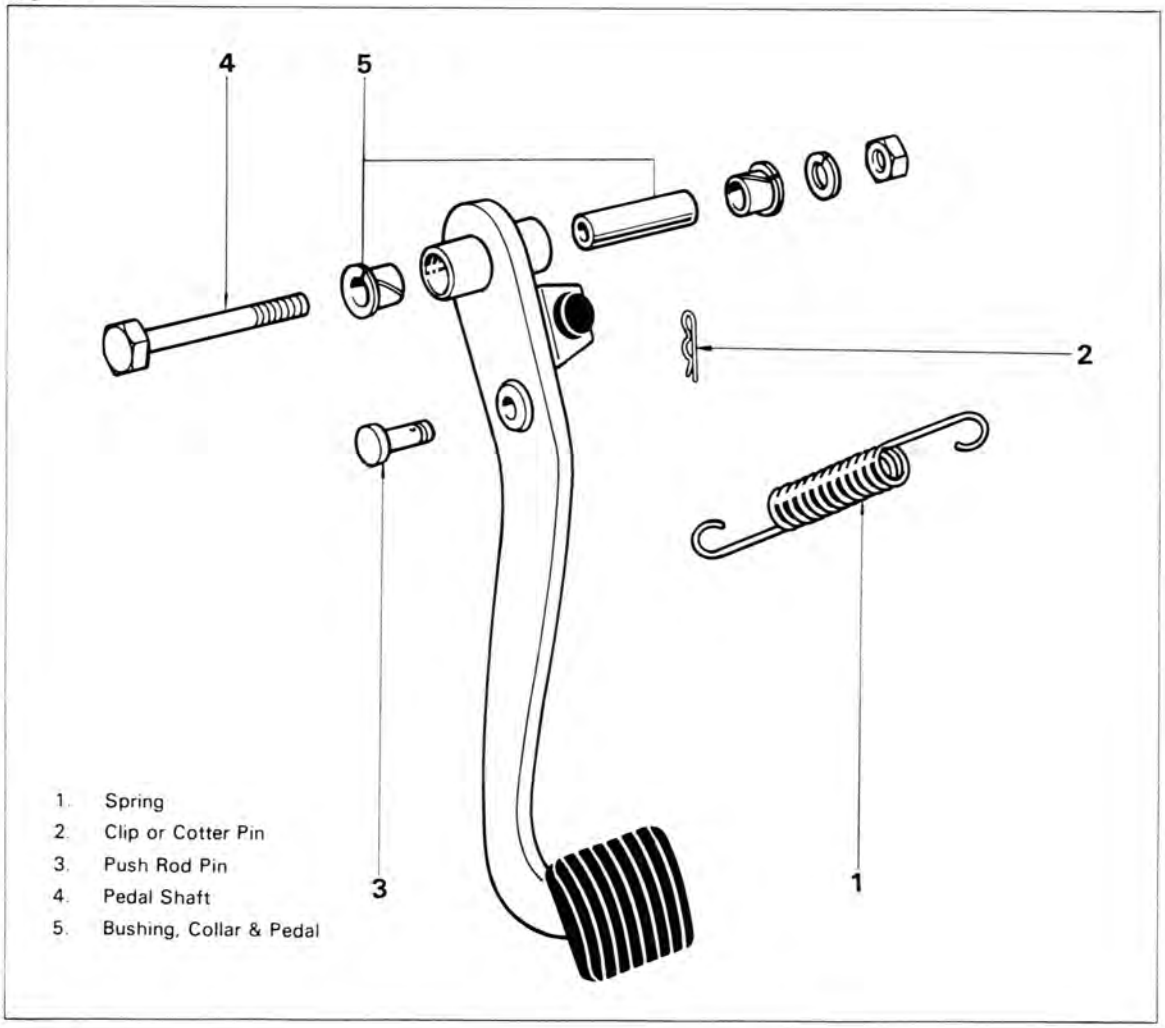

Fig. 2-8

INSPECTION

Inspect the parts for wear or damage

Fig. 2-9

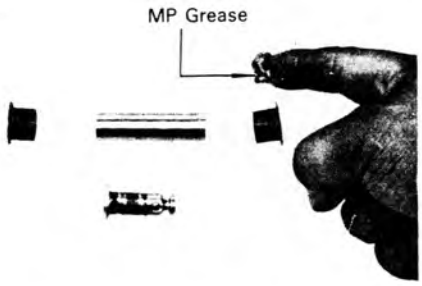

INSTALLATION

Install in the reverse sequence of removal.

– Note –

Coat MP grease onto the bushings and the collar.

Fig. 2-10

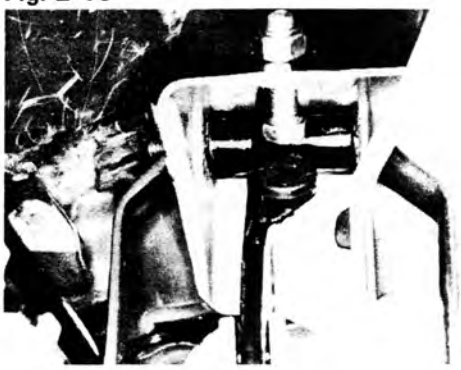

Tighten the pedal shaft.

Tightening torque: 3.0 – 4.5 kg-m (22 – 32 ft-lb)

CLUTCH MASTER CYLINDER

REMOVAL

Remove the parts in the numerical order shown in the figure.

Fig. 2-11

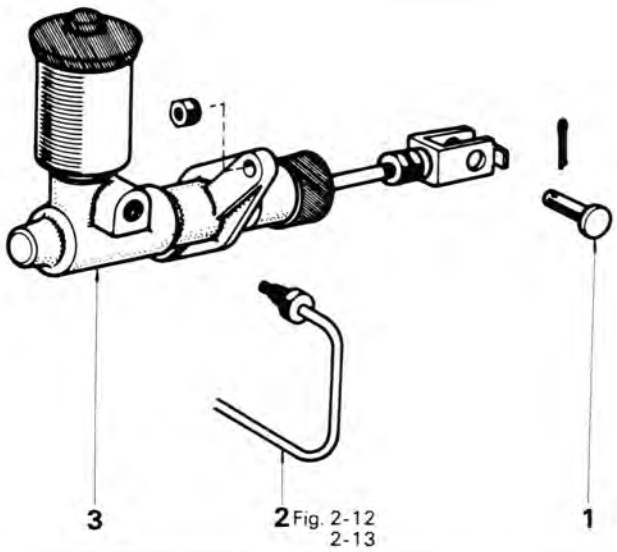

1. Push Rod Pin
2. Clutch Tube
3. Master Cylinder

Fig. 2-12

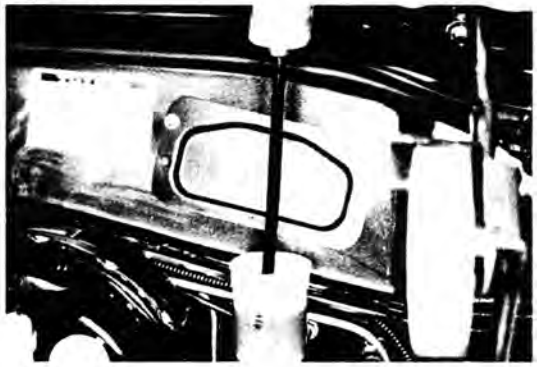

Take out fluid with a syringe or such.

Fig. 2-13

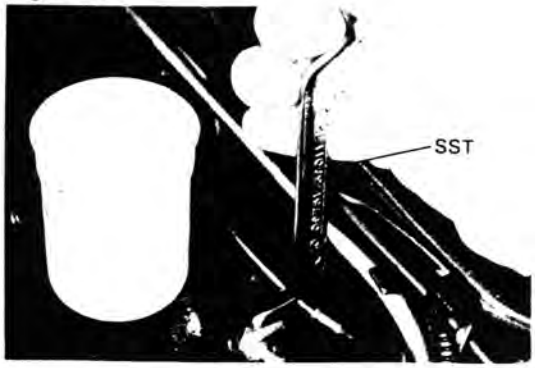

Disconnect the clutch tube with SST.
SST [09751-36011]

– Note –
Do not allow any brake fluid to get on painted surfaces.

DISASSEMBLY

Disassemble the parts in the numerical order shown in the figure.

Fig. 2-14

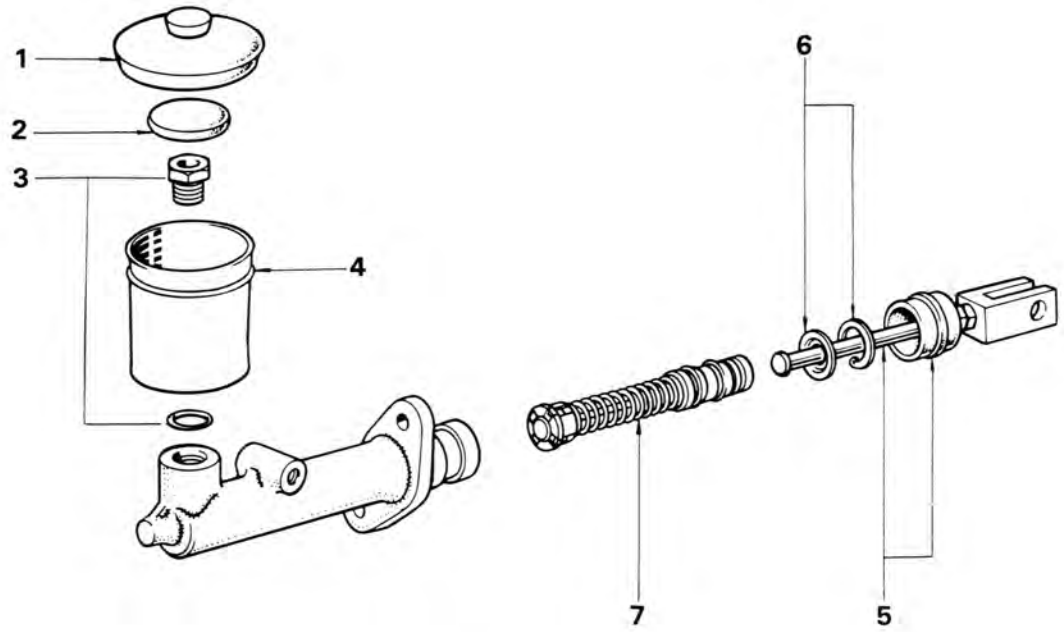

1. Reservoir Cap
2. Float
3. Reservoir Set Bolt
4. Reservoir Tank
5. Push Rod & Boot
6. Snap Ring & Washer
7. Piston

Fig. 2-15

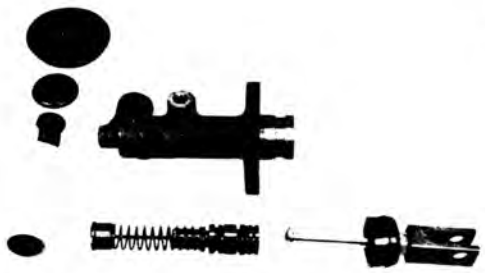

INSPECTION

1. Inspect the master cylinder bore for rust and scoring.
2. Inspect the piston and the cylinder cups for wear, scoring, cracks or swelling.

– Note –

1. **Wash the disassembled parts with brake fluid.**
2. **If either one requires replacement, use the cylinder kit.**

ASSEMBLY

Assemble the parts in the numerical order shown in the figure.

Fig. 2-16

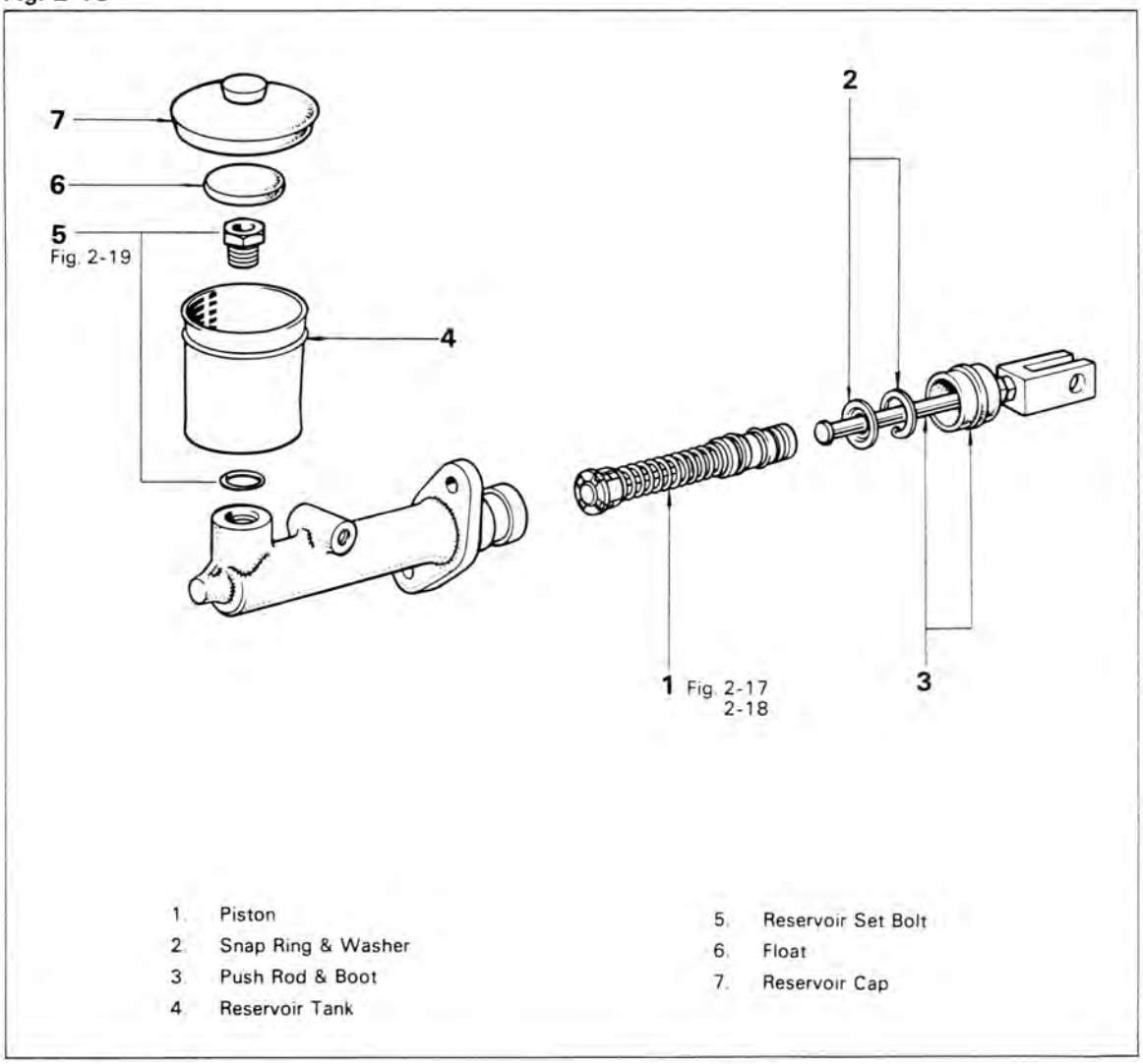

Fig. 2-17

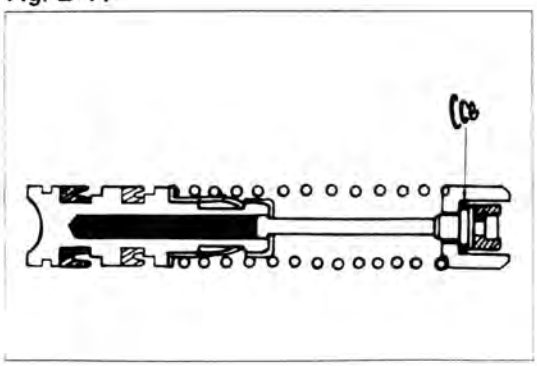

Conical spring and cylinder cups are parts with directionality.

Fig. 2-18

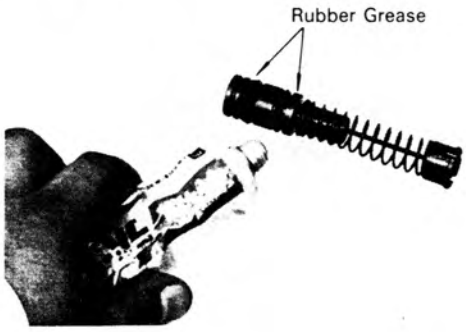

Apply rubber grease to the cylinder cups.

Fig. 2-19

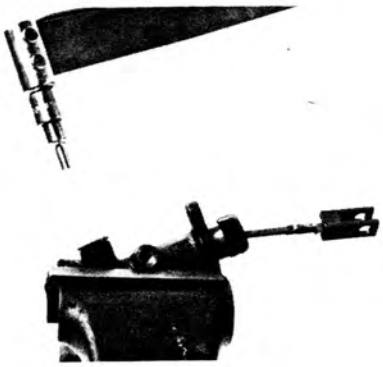

Install the reservoir tank.

Tightening torque: 2.0 – 3.0 kg-m (15 – 21 ft-lb)

INSTALLATION

Install the parts in the numerical order shown in the figure.

Fig. 2-20

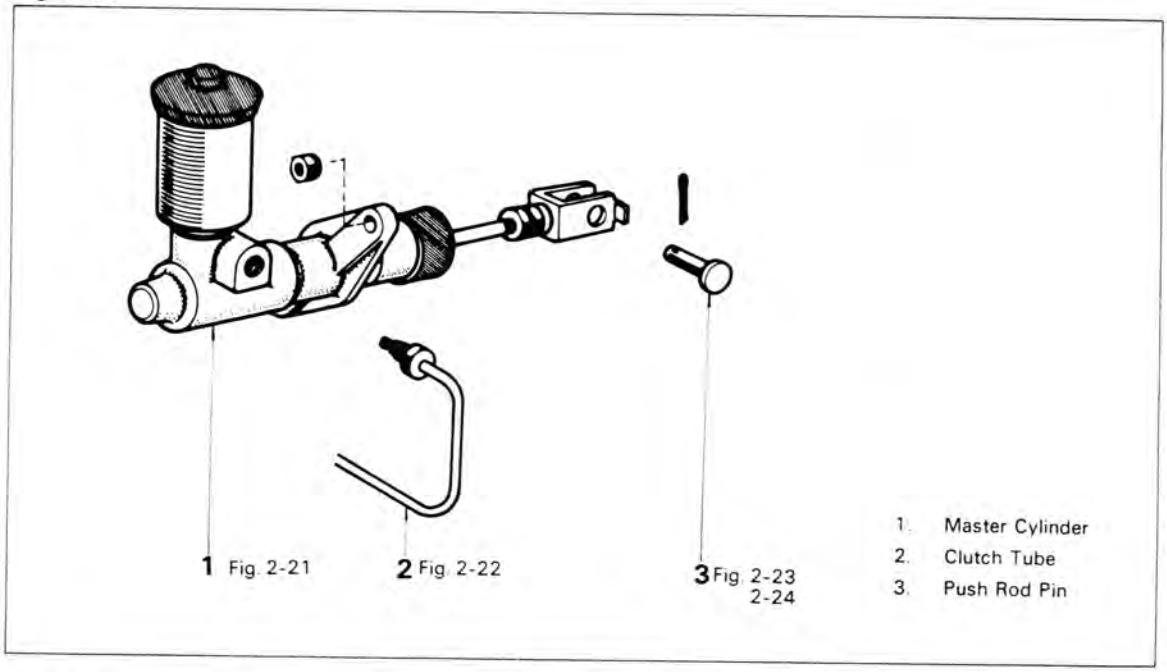

Fig. 2-21

Tighten the mounting nuts.

Tightening torque: 1.0 – 1.6 kg-m (8 – 11 ft-lb)

Fig. 2-22

Connect the clutch tube with SST.
SST[09751-36011]

Tightening torque: 1.3 – 1.8 kg-m (10 – 13 ft-lb)

Fig. 2-23

SEE **CLUTCH PEDAL** **ADJUSTMENT** **SECTION** **Fig. 2-1**

Adjust the pedal height and play.

Fig. 2-24

	SEE **AIR** **BLEEDING** **SECION** **Fig. 2-3 to 2-6**

Bleed the air from clutch line.

Fig. 2-25

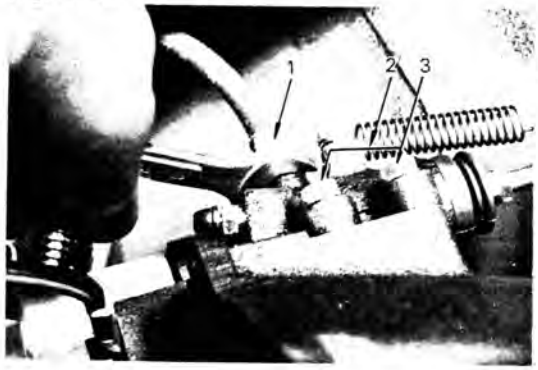

CLUTCH RELEASE CYLINDER

REMOVAL

Remove the following parts.

1. Pipe union
2. Return spring
3. Release cylinder set bolt

DISASSEMBLY

Disassemble the parts in the numerical order shown in the figure.

Fig. 2-26

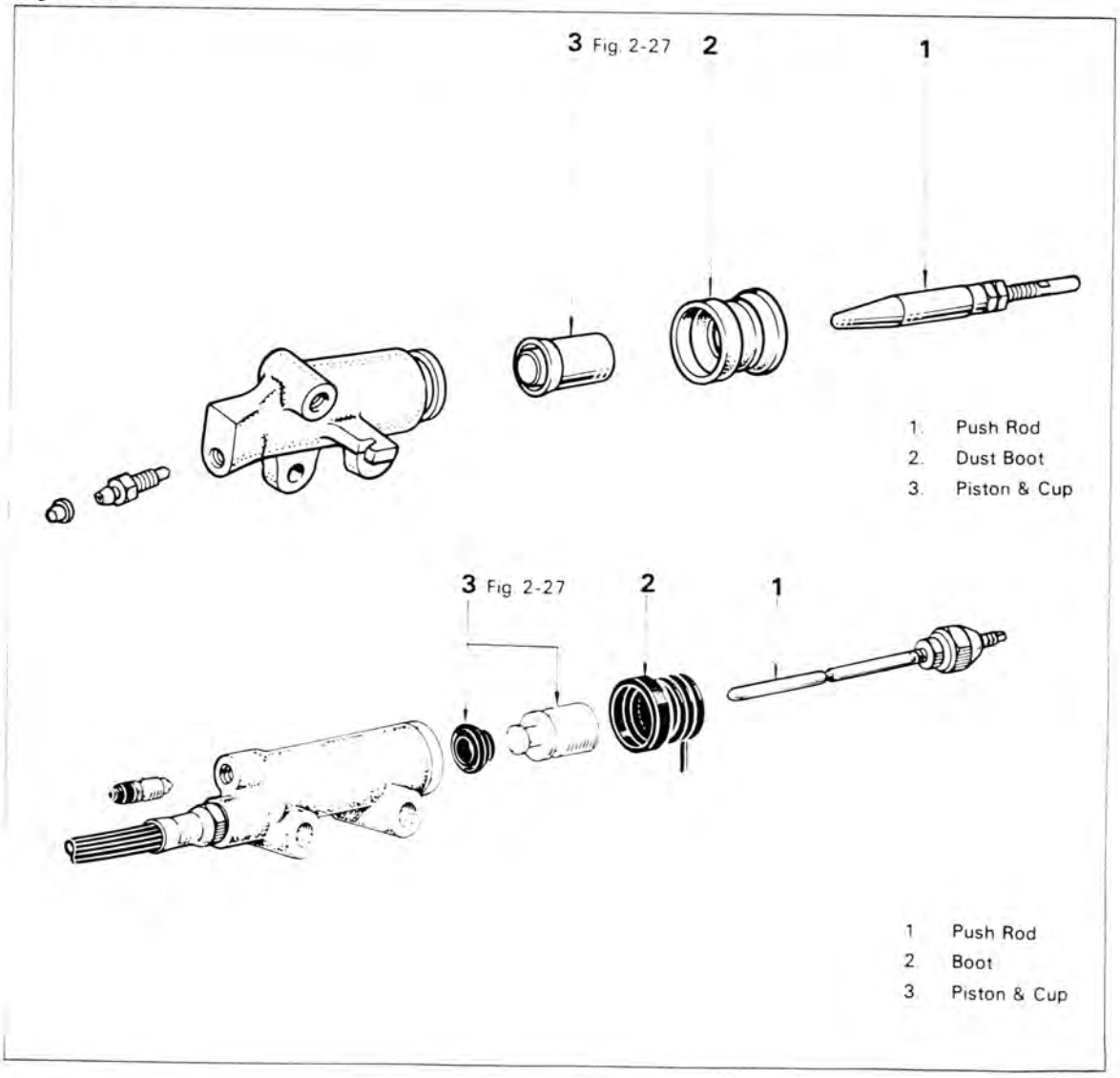

Fig. 2-27

Remove the piston by blowing compressed air in the outlet hole.

Fig. 2-28

For BJ Series

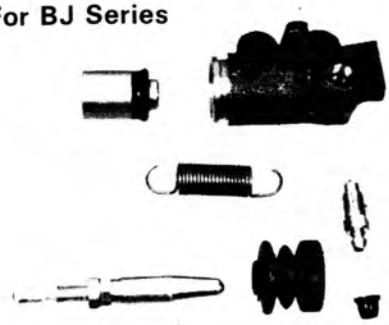

For FJ, HJ Series

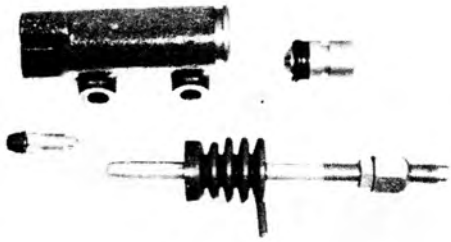

INSPECTION

Inspect the disassembled parts for wear or damage.

ASSEMBLY

Assemble the parts in the numerical order shown in the figure.

Fig. 2-29

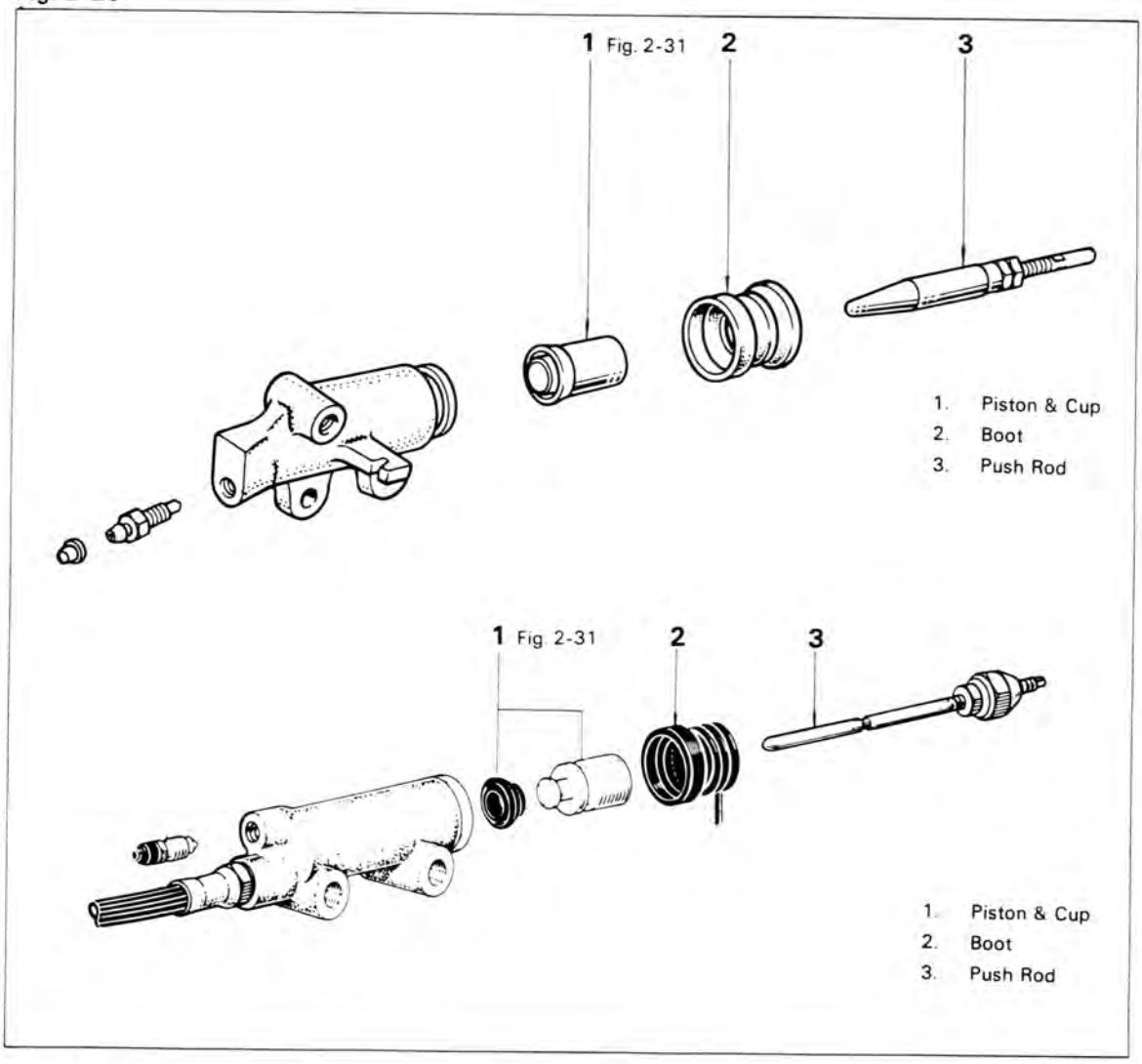

Fig. 2-30

Clean all parts in fresh brake fluid before assembling.

Fig. 2-31

For BJ, Series

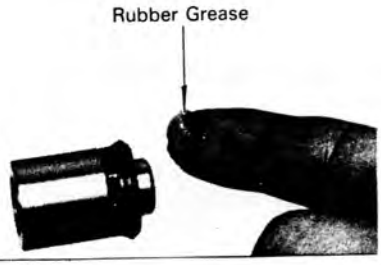

For FJ, HJ Series

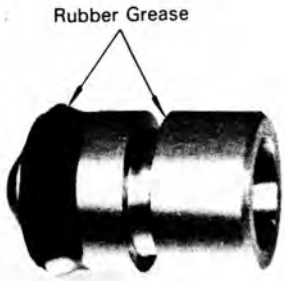

⚠ Apply rubber grease to the piston cup.

Fig. 2-32

SEE
CLUTCH RELEASE
CYLINDER ADJUSTMENT
SECTION
Fig. 2-2

INSTALLATION

1. Install in the reverse sequence of removal.
2. Adjust the play at the release fork tip.

Fig. 2-33

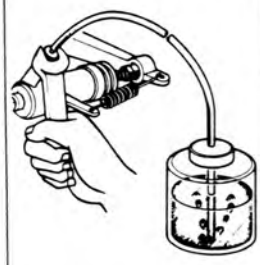

SEE
AIR
BLEEDING
SECTION
Fig. 2-3 to 2-6

3. Remove the air from clutch line.

CLUTCH UNIT & RELEASE BEARING

REMOVAL

Remove the parts in the numerical order shown in the figure.

Fig. 2-34

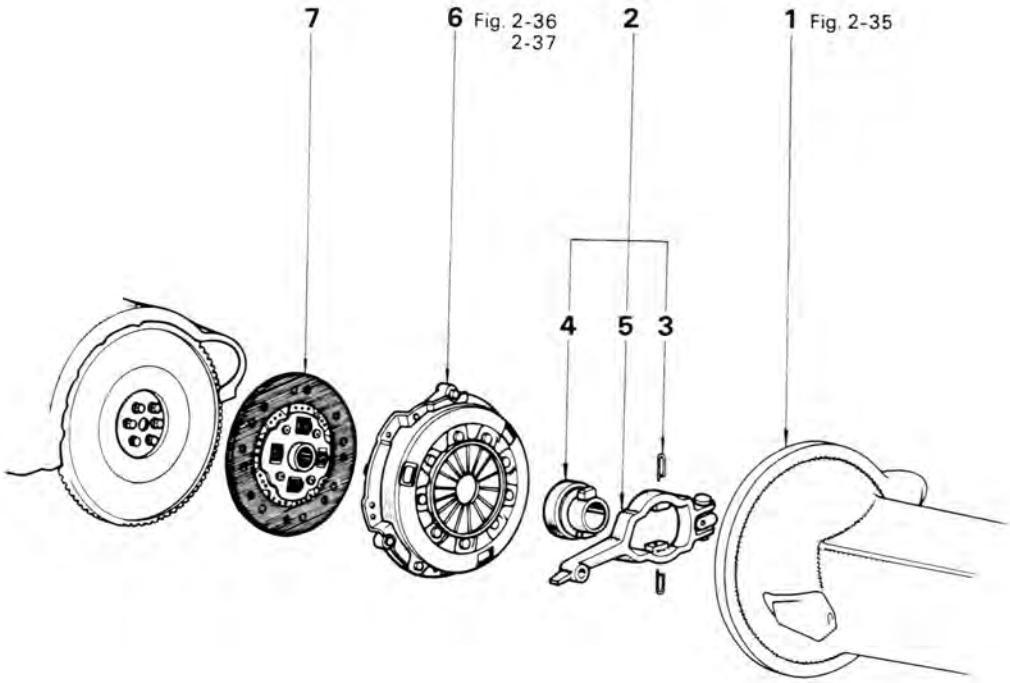

1. Transmission
2. Release Bearing, Hub & Fork
3. Clip
4. Release Bearing & Hub
5. Release Fork
6. Clutch Cover
7. Clutch Disc

Fig. 2-35

SEE

TRANSMISSION

REMOVAL

SECTION

Fig. 3-2 to 3-5

Remove the transmission.

Fig. 2-36

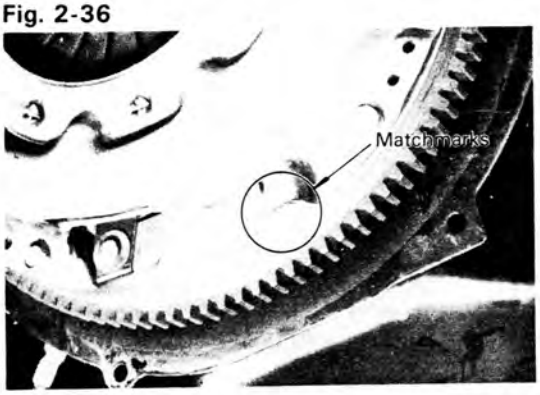

Place matchmarks on the clutch cover and the flywheel.

Fig. 2-37

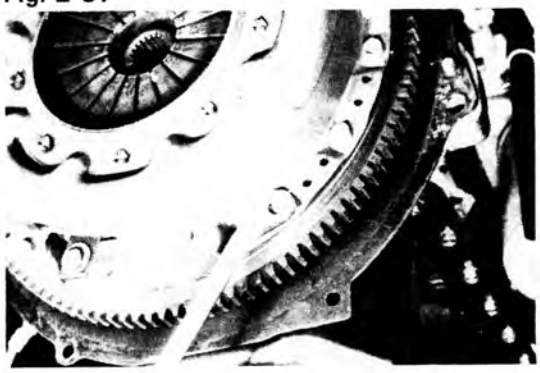

Loosen the set bolts one turn at a time until the spring pressure is released.

– Note –

Do not allow oil or grease to get on the clutch disc linings, or on the pressure plate and flywheel surfaces.

Fig. 2-38

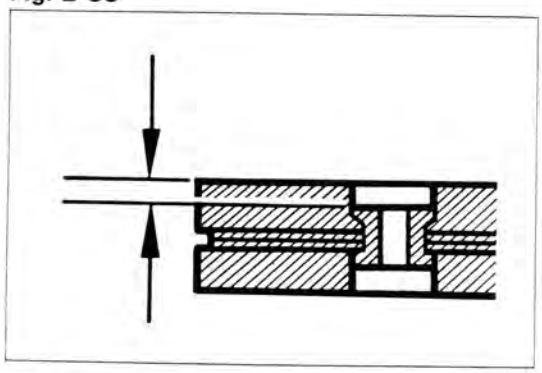

INSPECTION

Clutch Disc

Inspect the disc, and repair or replace if any part of it is found defective.

Rivet head depth:
Limit 0.3 mm (0.012 in.)

Fig. 2-39

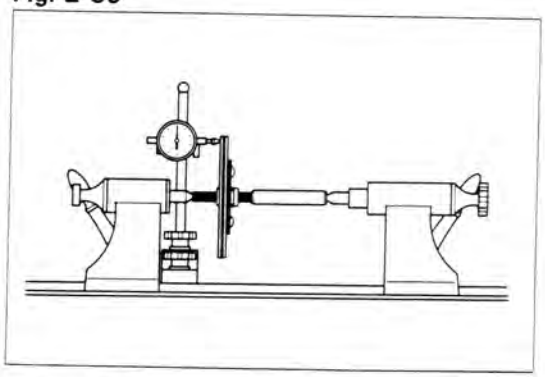

Inspect the disc for runout.

Runout:
Limit 1.0 mm (0.039 in.)

Fig. 2-40

Clutch Cover

Inspect the clutch cover and pressure plate for wear and burning, and repair or replace if found defective.

Fig. 2-41

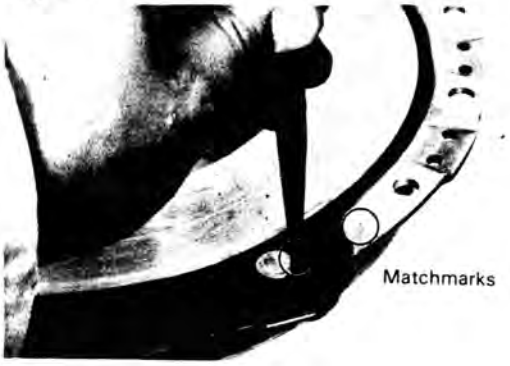

Replace The Clutch Pressure Plate

1. Place matchmarks on the clutch cover and pressure plate.

Fig. 2-42

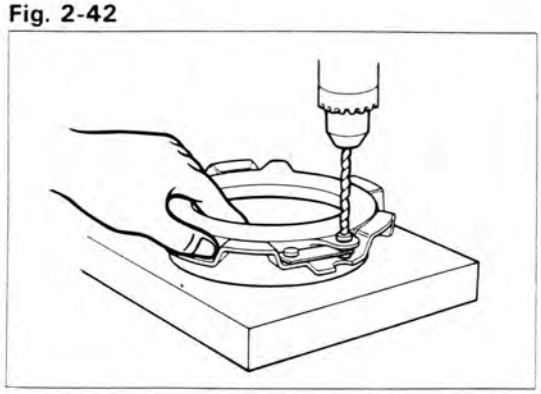

2. Remove the rivet heads by drill and punch out the rivets.

Fig. 2-43

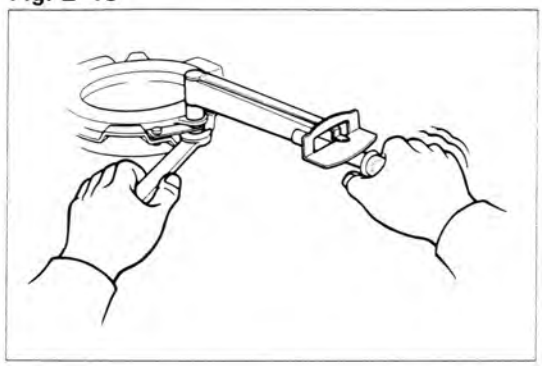

3. Assemble the pressure plate and clutch cover by using servicepurpose bolts and nuts.

Tightening torque: 2.0 – 3.0 kg-m (15 – 21 ft-lb)

– Note –
Stake the nuts after tightening.

Fig. 2-44

Bearing, Hub & Fork
Inspect for wear or damage.

– Note –
This ball bearing is permanently lubricated and does not require repacking or cleaning.

Fig. 2-45

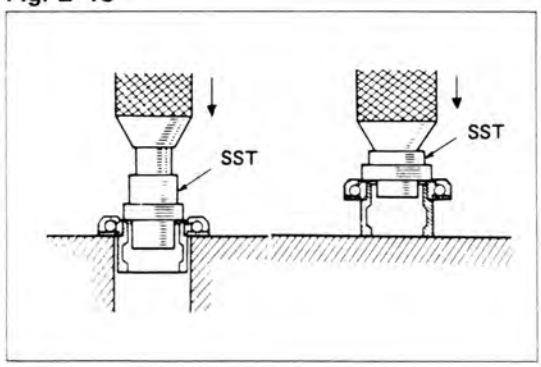

Replace The Release Bearing

1. Remove the bearing with SST. SST[09315-00021]
2. Install the bearing with SST. SST[09315-00021]

Fig. 2-46

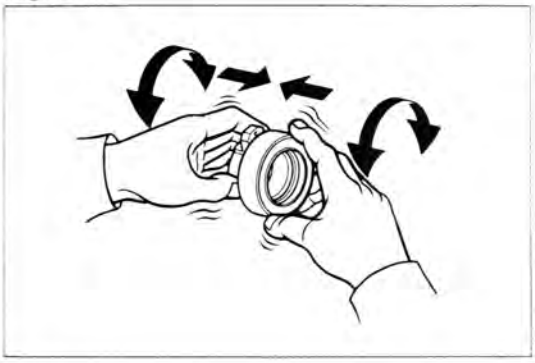

3. After assembling the bearing to the hub, insure that it rotates smoothly.

Fig. 2-47

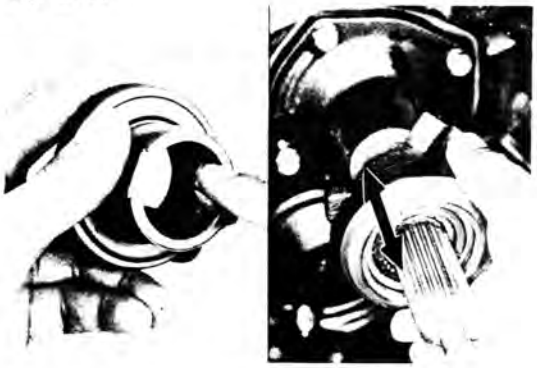

4. Coat the hub groove with molybdenun disulphide lithium base grease.
5. Insure that the hub and bearing retainer slide smoothly.

Fig. 2-48

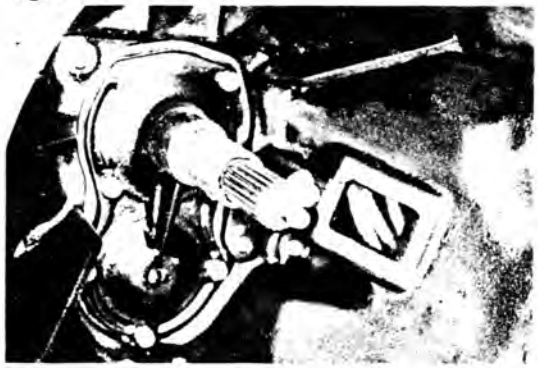

Front Bearing Retainer

Inspect for wear on the release bearing sliding surface.

Fig. 2-49

Pilot Bearing

Inspect the bearing for damage or sticking.

Fig. 2-50

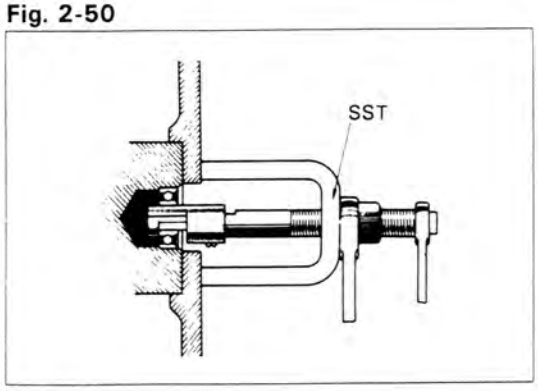

Pilot Bearing

With the bearing still installed on the crankshaft, inspect it for excessive wear, sticking, and abnormal noise.

Replace the bearing if found defective.

1. Remove the bearing from the crankshaft with SST.
   SST [09303-55010] FJ & HJ series
   [09303-35010] BJ series

Fig. 2-51

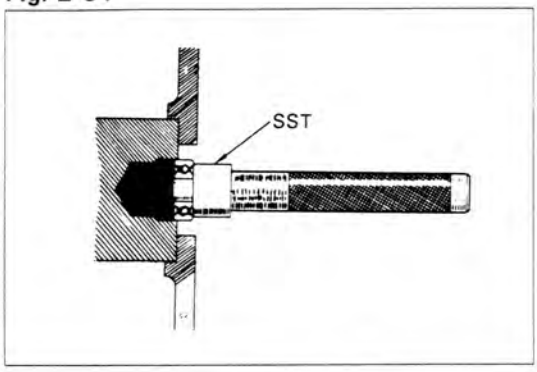

2. Coat the new bearing with MP grease, and drive the bearing into the crankshaft with SST.
   SST [09304-47010] FJ & HJ series
   [09304-30012] BJ series

INSTALLATION

Install the parts in the numerical order shown in the figure.

Fig. 2-52

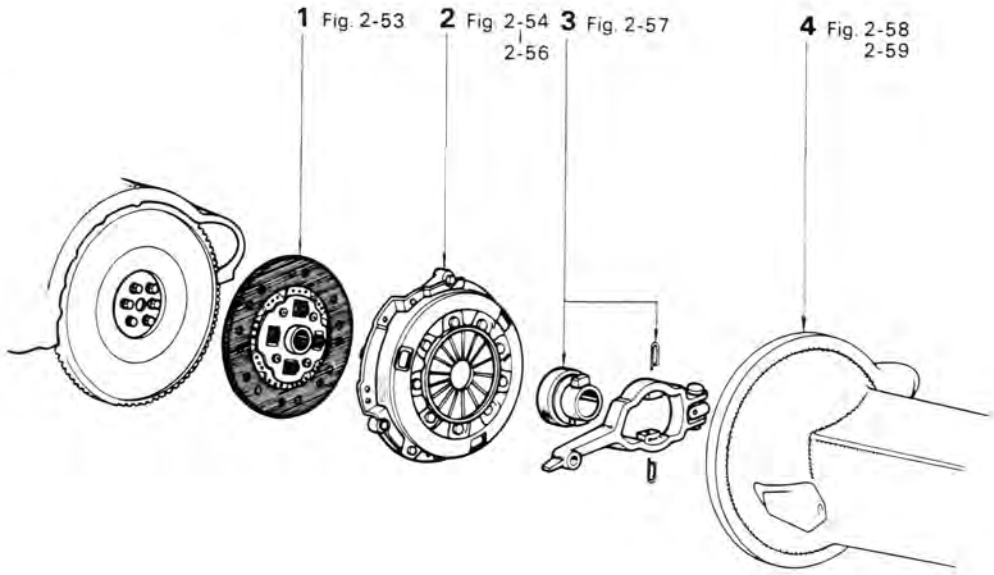

1. Clutch Disc
2. Clutch Cover
3. Release Bearing, Hob & Fork
4. Transmission

Fig. 2-53

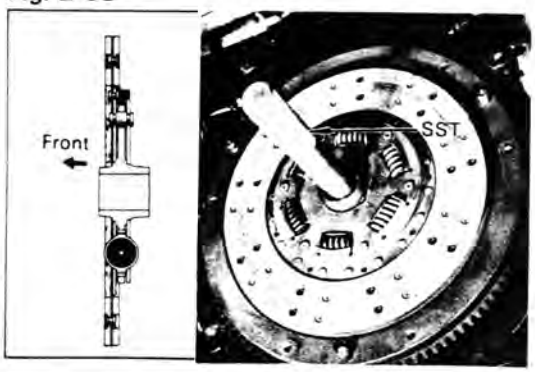

Install the clutch disc onto the flywheel with SST

SST [09301-20020] BJ series
[09301-55022] FJ & HJ series

Fig. 2-54

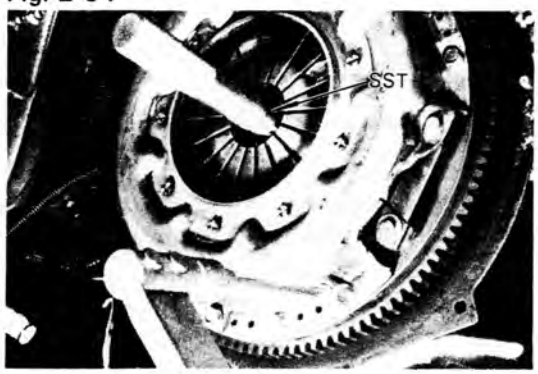

Tighten the bolts uniformally, a little at a time.
SST [09301-20020] BJ series
[09301-55022] HJ & FJ series

Tightening torque: 1.5—2.2 kg-m (11—15 ft-lb)

Fig. 2-55

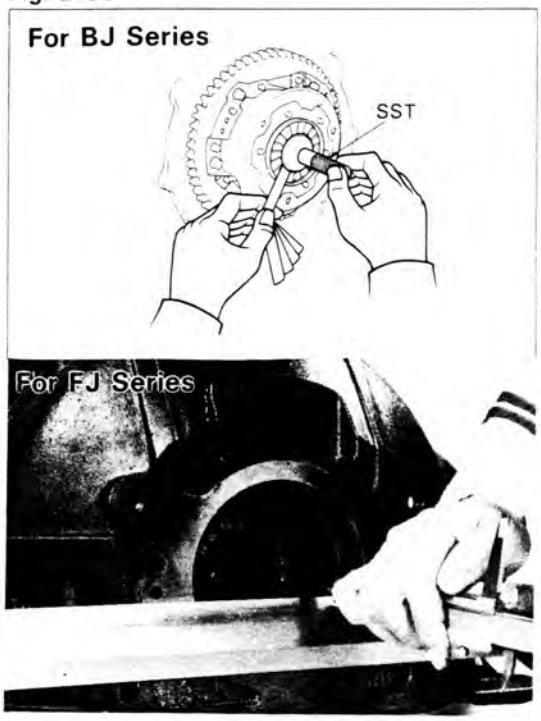

Check the diaphragm spring tips for alignment with a thicknesss gauge and SST.
SST [09301-00012]

Limit of non-alignment: 0.5mm (0.020 in.)

Fig. 2-56

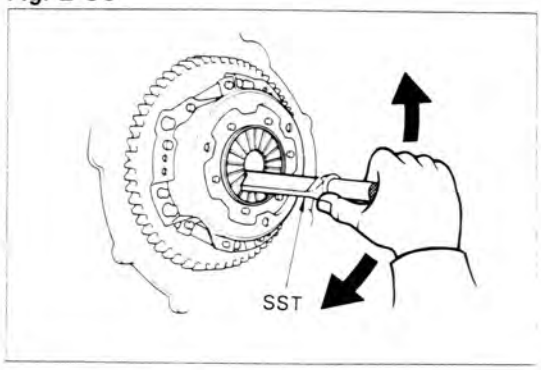

If over the limit of non-alignment, correct with SST.
SST [09301-00012]